Presenter Profile:

- Vice President of Blaze King Industries, Inc of Walla Walla WA.,
  - In business since 1977
  - Stove Manufacturer
    - Non catalytic since 1977
    - Invested In Manufacturing & Perfecting

      Catalytic wood stoves since 1983
  - Executive Committee Member of the Catalytic Hearth Coalition (CHC)

Question?

- How many of you traveled here by:
  - Airplane?
  - Car?
  - Bus?
- How many of you:
  - Had a cup of coffee this morning?
  - Had breakfast in a restaurant or fast food place?

CATALYTIC HEARTH COALITION

Catalytic Technology is Everywhere










The Catalytic Hearth Coalition

- Mission Statement:
  - **T*o work with <u>all</u> manufacturers of catalytic products to continually refine and improve these products for the environment and to educate the public about the benefits of catalytic technology*.**
- ***Shared Knowledge & Ideas Between Members***

One Way To Deal With Emissions

- Non-Catalytic Design
  - Requires >1200ºF to Control Emissions
    - Firebox and Components Need to Maintain >1200ºF

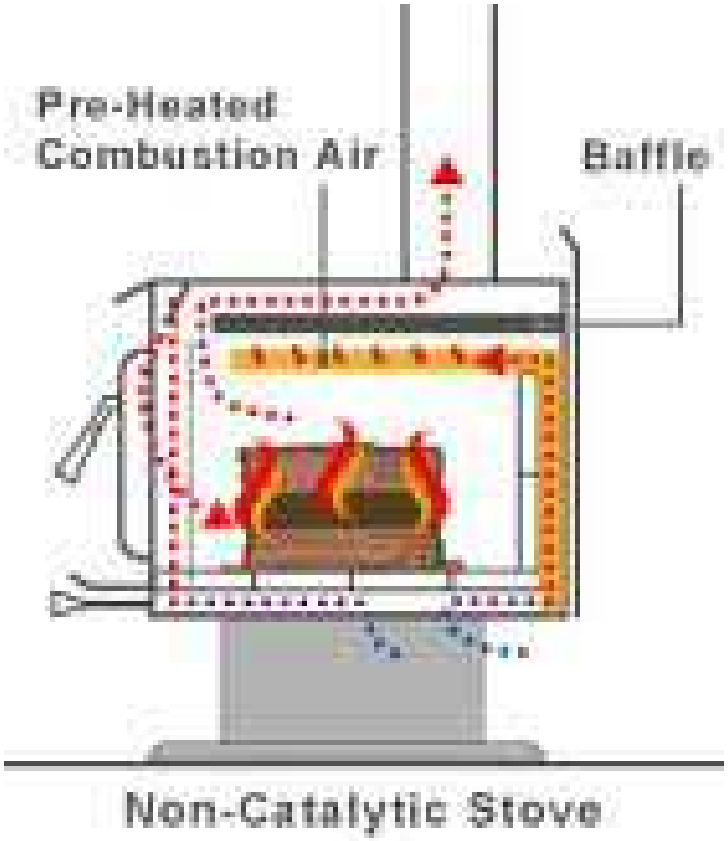

Another Way To Deal With Emissions

- Catalytic Stove Design
  - Start to Control Emissions at 550ºF to Control Emissions, including VOC's
  - Simple To Replace Element Much Like A Cars Oil Filter

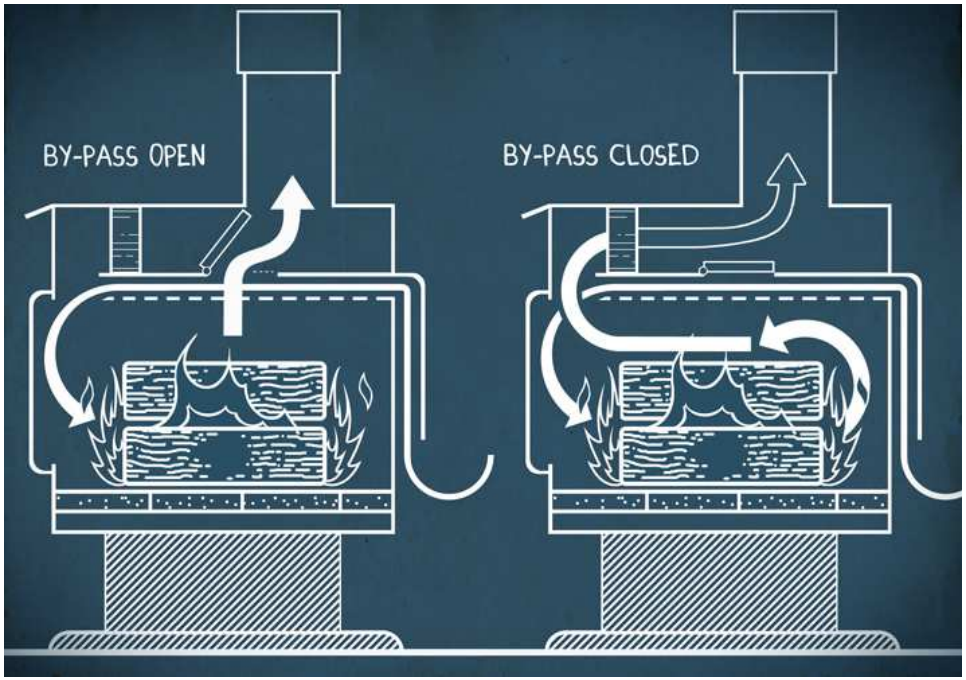

Side by Side Design

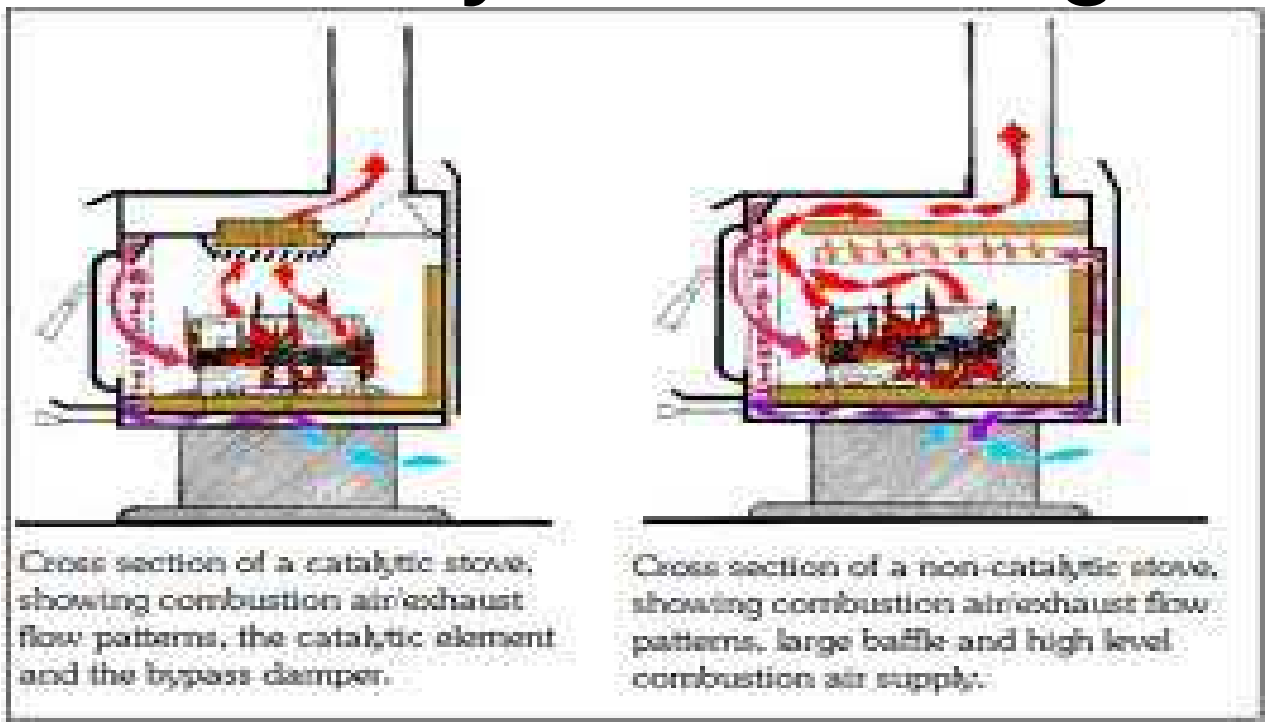

- New Stainless combustors get 550 degrees in less than 15 minutes
- This translates to cleaner emissions sooner
- There is place for BOTH Catalytic or Non Catalytic Wood Stoves

Catalytic Advancements & Accomplishments

Combustors Are More Compact & Thicker Combustors Increase Residence Time Due To Greater Surface Area

Combustors Are Accessible & Readily Visible Not Buried In Stoves

Orientation and Position Take Exposure into Account

Therefore:

Catalytic Wood Stoves have become even more efficient, which is as important as clean burning

More Durable with Life-Spans up to 10 Years or more

Lowest Average Emissions Amongst All Wood Stoves

Lowest Burn Rates & Burn Times

Highest Average Efficiency For every Pound burned

Best “Turndown Rate” (widest range of output between high and low

Design Changes

- Older designs used the catalyst as an add on and not part of the original design

Rear Design Exposed the Catalyst to High Temperatures and Made it Difficult for the customer to Access

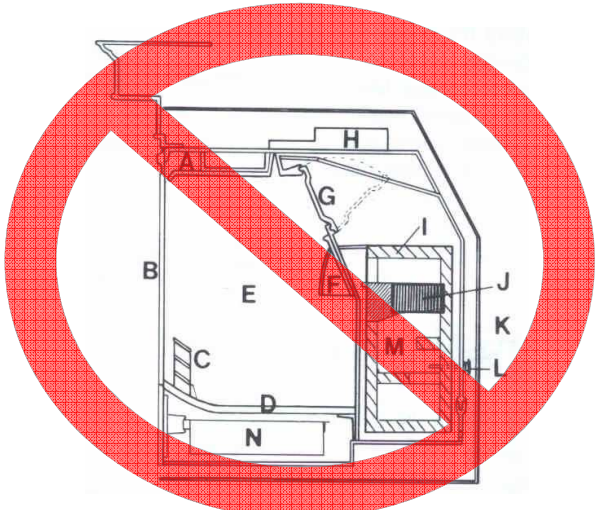

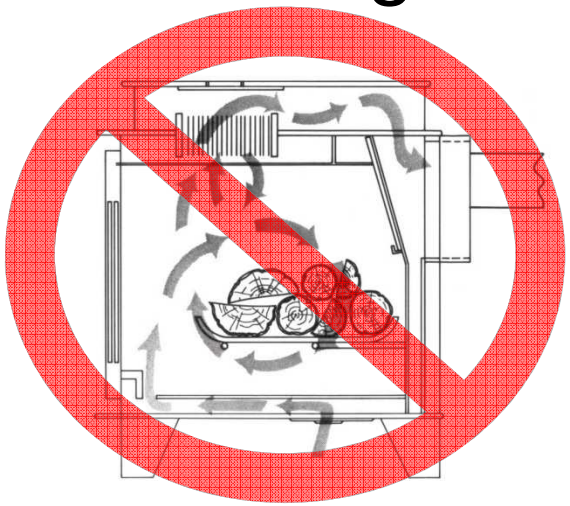

Horizontal Catalyst Place Right Above the Firebox Exposed the Catalyst to Flame Impingement and Stability Problems (Catalyst Would Fall Out)

In-Line design Offered Poor Bypass Controls Resulting in Plugging of the Catalyst

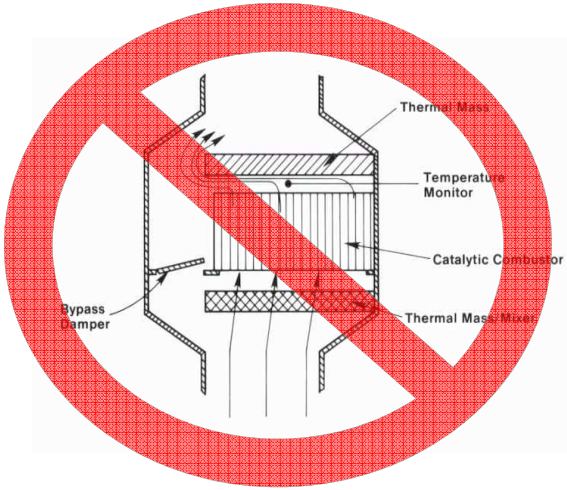

One Example Poor Bypass Designs

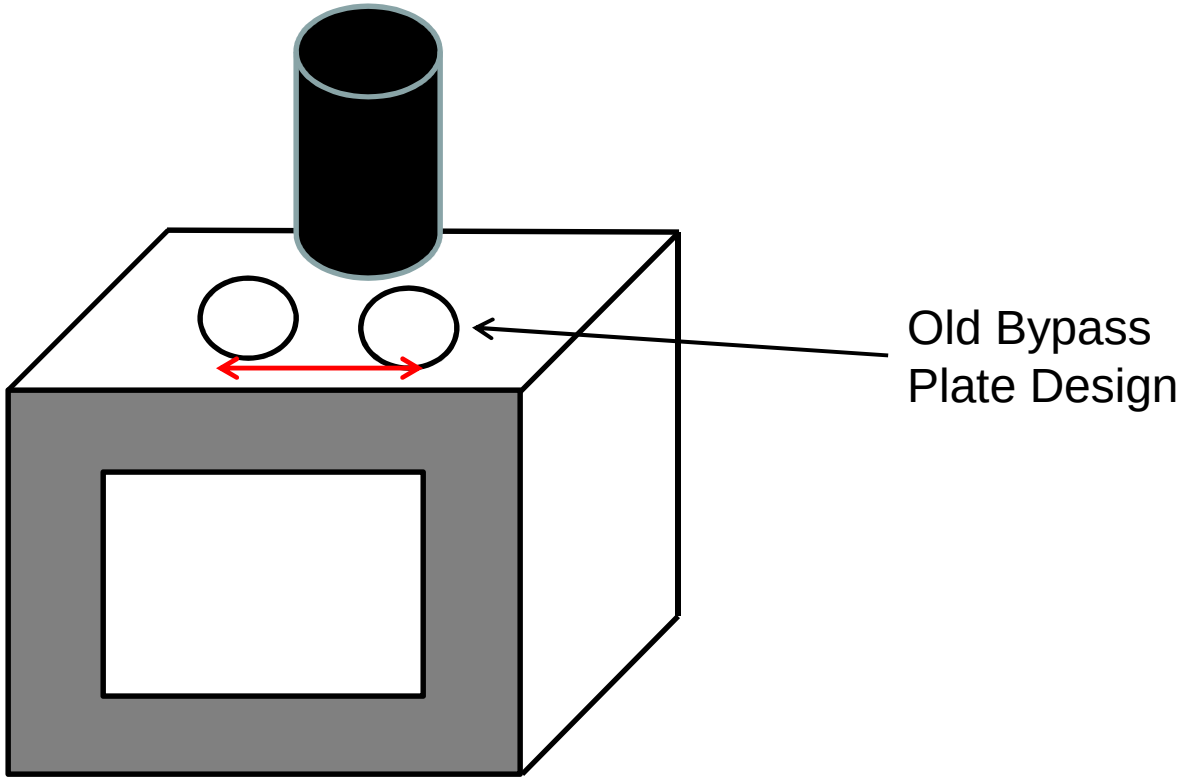

New Designs

- Treat the Catalyst as Part of the Stove, Even Offering "Hybrid" Designs Combining Thermal and Catalytic Combustion Technologies
- One Manufacturer has even designed a stove that works as either catalytic or non catalytic

Catalyst is Easy to Access for the Consumer and Protected From Flame Impingement and Thermal Damage

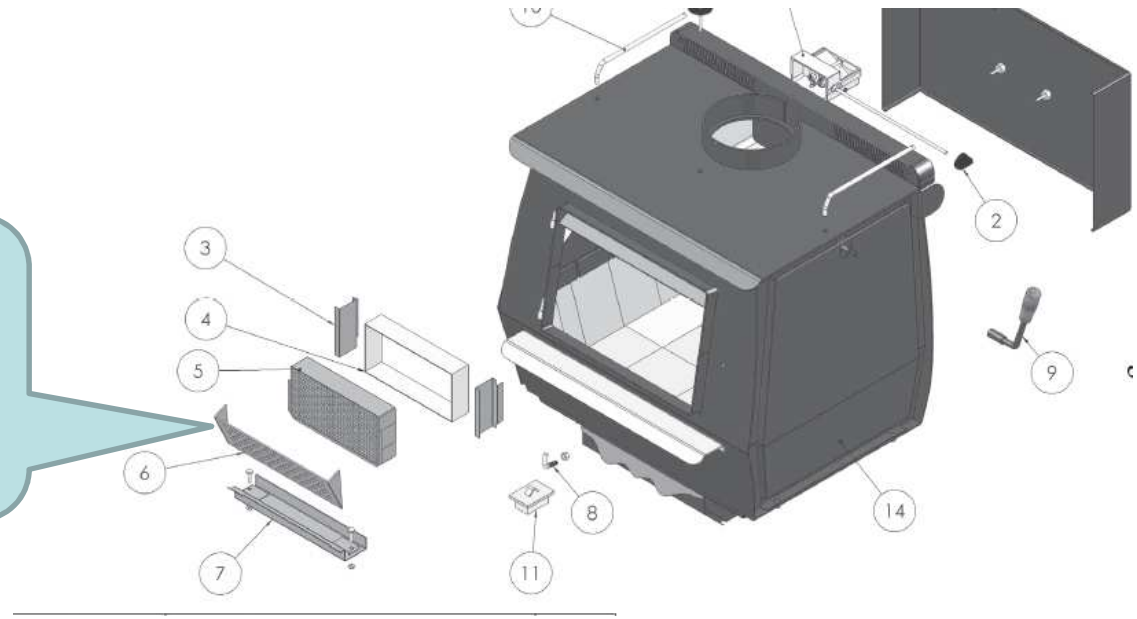

Life of a Combustor

- The Anticipated Operational Life is Up to 10 Years
- Studies were Performed Independently by Omni Environmental Laboratories
- The Omni aging study conducted in December of 2009 Showed Limited Reduction in Activity After Multiple Seasons of Use
- All Combustors In the Study had a minimum of 3 cords burned each year

Change of Particulate Emission in an Aged Combustor

Less Than 1 g/hr Average Change in Emissions After 9 Years

Results – Summary

Stove A	New[1]	Used 5.75 Years	Used 8.5 Years
Particulate Mater (5H Adjusted (g/hr))	85% Reduced Emissions	0.14 g/hr Increase from New	0.3 g/hr Increase from New

Stove B	New[1]	Used 5.75 Years	Used 8.5 Years
Particulate Mater (5H Adjusted (g/hr))	83% Reduced Emissions	1.9 g/hr Increase from New	1.04 g/hr Increase from New

[1]Aged based on EPA Method 28 Guidelines

Regulations Revisited:

Current Standards:

Type of Device	Washington State Limit	EPA Limit
Catalytic Wood Burning Device	2.5 grams per hour	4.1 grams per hour
Non-Catalytic Wood Burning Device	4.5 grams per hour	7.5 grams per hour

Keeping in Mind The Original Logic Used For Sub Categorization (Dual Standards)

With An Increase of ~1 g/hr over 9 Years A Washington State Approved Catalytic Stove will not reach the same emission levels as a Washington State Non-Cat Stove for *18 Years*.

An EPA Approved Catalytic Stove will not reach the same emission levels as a EPA Approved Non-Cat Stove for *30 Years*

How Does Catalyst Work?

- Definition: A catalyst is a substance which lowers the activation energy for a given reaction, without being consumed by the reaction.
  - Catalysts create a Combustion Reaction (Also Referred to As “Oxidation "Reaction)
- Carbon in any compound Combines with Oxygen to form Carbon Dioxide and Water

Smoke / VOCs

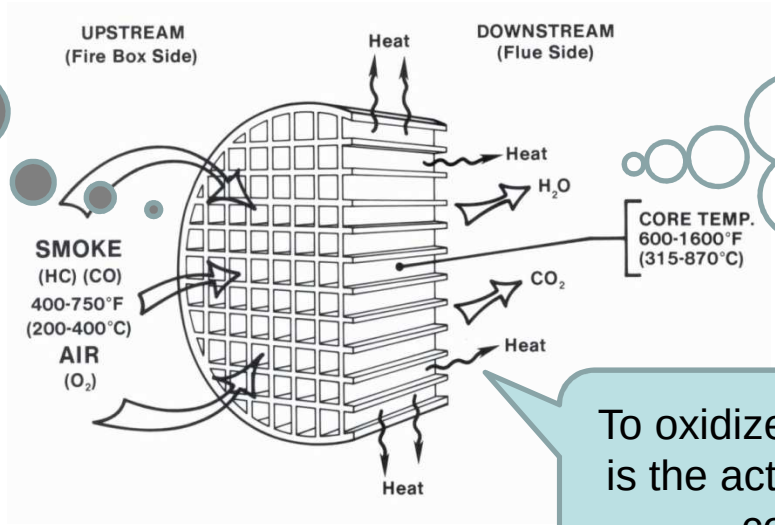

Water Vapor / Carbon Dioxide

To oxidize organic compounds, HEAT is the activation energy necessary to complete the reaction.

Catalyst Evolution

- Catalyst Manufacturers Continue to Improve the Technology From Supports…
  - Ceramic
    - Cordierite
    - Mullite
    - Reticulated Foam
  - Steel

Catalyst Improvements

- To Chemistry
  - Higher Temperature Resistant Coatings Increasing Surface Area
  - Alternative Catalytic Components & Metals

    Performance Monitoring
  - Activation Supports
  - Thermometers

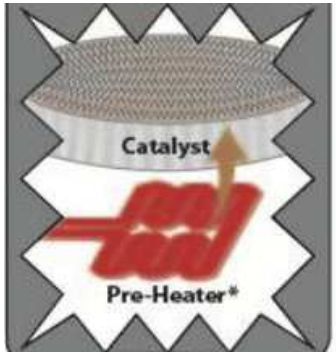

- CHC Recommend Mandatory Inclusion of Monitoring Device

Catalyst Opportunities

- Alternative Methods to Activate the Catalyst

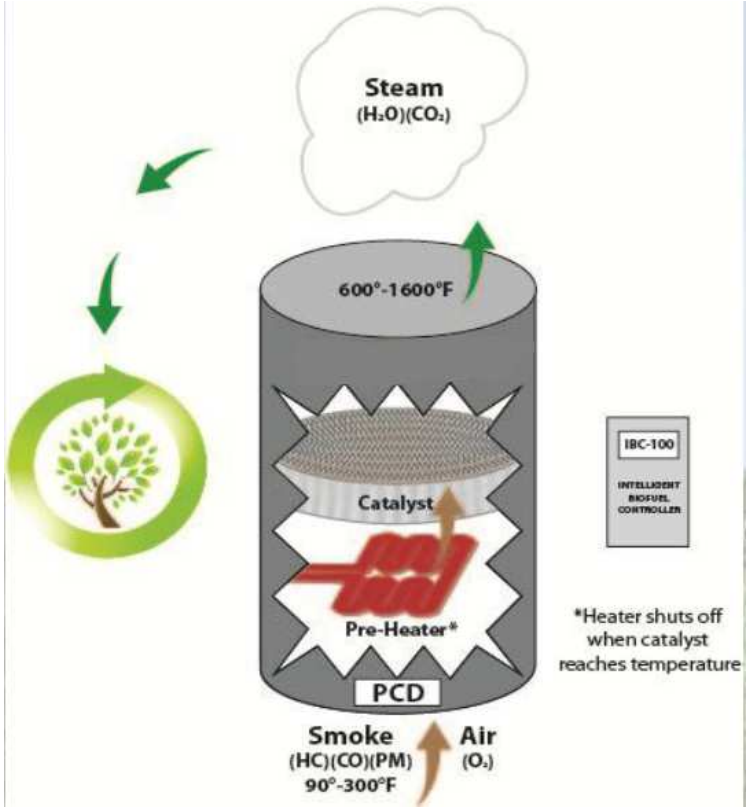

Difficulties in Advancements

- Test Methods and Stove Categories Limit Design Opportunities & New Emissions Elimination Technology

Method 28

Method 5H

Method 5G

Method B415

ASTM E2780-10

CATALYTIC HEARTH COALITION

How It Was

- 1980's Supply Chain Resulted in Increased Prices, Miscommunications and Delays

Welcome.

Protecting the Environment and Saving

Find Your FireCat Wood Stove Combustor Re

Click on the manufacturer of your stove to find the wood stove c replacement for that model.

Our combustors usually ship within 5-7 business d

We CANNOT ship to P.O. Boxes.

NOTE: Check with your Woodstove Manufacturer's Manual to det replacement combustors your model requires and how many feet of

Aladdin Hearth	Consolidated Dutchwest	Englander	Kingsman	Opel	
American Eagle	Country Comfort	FPX	Kuma/Marks Custom	Oregon Woodstove	Suburban Manufacturing
American Road	Country Flame	Georgetown Woodstove	Lancaster Fab	Orley Manufacturing	Timbereeze
Appalachian	Craft Stoves	Hardy MFG Company	Leaders	Orrville Products	Travis Industries
Arrow	Derco	Harman/Vansco	Lennox	Panda Stove	US Stove
Ashley	DK Metals	Hearth Heat	Lilly Stoves	Reges Metal	Vansco/Harman
Aspen	Dominion Sierra	Hearthstone	Long Manufacturing	RiteWay	Vermont Castings
Atlanta Stove	Doorwood	Heatilator Inc.	Marks Custom	RSF Energy	Vestal Manufacturing
Blaze King	Dove/Buckner	Heating Energy	Martin Industries	Rupp	Webco Industries
Buck Corp.	Dovre	High Sierra	Miracle Heat	Russo Products LTD.	Wet Industries
Buckner/Dove	Earth Stove	High Valley	National Steel Crafters	Salvo	Woodchief
C&D Distributors	Efel N.A./Foundries	Hi Teck	New Buck Corp.	Scandia	Woodmaster
Carolina Stove	Elmira Stoves	Horstman Industries	Nu-Tec	Sears	Woodstock Soapstone

CATALYTIC COMBUSTOR CROSS REFERENCE

Manufacturer & Model	Size of Catalyst (Each)	Order 1 Unit Unless Noted	Item #
BRUNCO			
Blazer	5.66" round x 2" with metal band		3408
BUCK CORP (MINPRO)			
17 Carolina, 20 Model, 20 Z3	3.875" x 6.875" x 2" with metal band		3508
41 Model, 50 Model, 70 Model	3.875" x 6.875" x 2" with metal band		3508
71 Freestanding	5.875" x 6.875" x 2" with metal band		3506
80 Model	5.875" x 6.875" x 2" with metal band		3506
91 Model	6" x 10.625" x 2" with metal band		3458
26000-C Model	1.875" x 6.875" x 2"	2 Required	3400
27000-C/CR Models	1.875" x 6.875" x 2"	2 Required	3400
Big Buck	1.875" x 6.875" x 2" with metal band		3402
Little Buck, Regular Buck	1.875" x 6.875" x 2"		3400
The Following Unit Requires 3 Catalysts Total.			
Smoke Genie	1.875" x 6.875" x 2" 1.875" x 3.25" x 2"	2 Required AND 1 Required	3400 3498
The Following Unit Requires 2 Catalysts (1 Each Of The Following)			
28000-C	1.875" x 6.875" x 2" 1.875" x 3.25" x 2"	1 Required AND 1 Required	3400 3498
BUCKNER ENTERPRISES			
Dove I Model	2" x 7" x 2"	2 Required	3496
C&D DISTRIBUTORS			
Ultra Burn Retrofits	5.66" round x 1.5"		3502
CAROLINA STOVE			
Challenger II Model	5.66" round x 2" with metal band		3408

Select Language

ABOUT OUR COMBUSTORS
» How They Work
» Operation Tips
» Gasket Details
» Care & Maintenance
» Why Use Catalyst
» When to Replace

NEW STEELCAT COMBUSTORS
» Available Steel Options
» Advantages of Steel

ABOUT US
» Fast, Easy Shipping
» Exports
» Combustor Warranty
» How They're Made
» Other Condar Products
» Contact Us
» Home

Condar, the combustor experts. We're

We make combustors for all makes, all models. Whether it's a manufacturer in business today, or a woodstove that's no longer offered. If you don't have ready access to a local dealer who has the combustor you need, order on-line from this web site.

Every Condar combustor is carefully fabricated to precise dimensions **in our North Carolina factory,** to the original specifications. All Condar catalytic combustors are made of high-quality materials, and are **approved by the U.S. Environmental Protection Agency.**

Clayton (2)
Concorde (3)
Consolidated Dutchwest (6)
Country Comfort (1)
Country Flame (14)
Craft (3)
Derco (4)
Dominion (1)

Catalytic woodstoves give you **longer burn times,** using the same amount of wood fuel, **than comparable non-catalytic models.** And **a catalytic stove emits less than 4.2 grams per hour** of particulate pollution into the atmosphere. So-called "high efficiency" non-cat woodstoves may emit up to 7.5 grams per hour! So your choice of a catalytic stove is better for our environment, while giving you nice, steady heat.

SEARCH

you have 0 items in your cart

Stovecombustors.com Online Store

VISIT OUR CATALOG PAGE ...
E CARRY EVERY SIZE AND SHAPE!
CLICK NOW!

9 EPA Clean Air Excellence Award

I American made products ! Stovecombustors.com is the exclusive :00 Series Stove Combustor from Clear Skies Unlimited. Approved by ction Agency EPA for use in all Catalytic Woodstoves. We take great reat values we offer our customers. We work hard to ensure that our t availability, reliable delivery, and superior customer service work shopping experience. Money Back 100% Sataisfaction Guarantee !
Check out our Specials Below:

:e : Our Combustors are only 1" Thick

s Annual Combustor Sale

Limited Time ONLY:

6 Inch Round Canned

Ashley 2 x 7 Canned

Encore Canned

ba.org

How It Works Now Encourages Maintenance

- O.E.M. Direct Purchase More Affordable
- Easy to Find Replacements Even For Out Of Business Stove Manufacturers

Aladdin Hearth	Consolidated Dutchwest	Englander	Kingsman	Opel	Silent Flame
American Eagle	Country Comfort	FPX	Kuma/Marks Custom	Oregon Woodstove	Suburban Manufacturing
American Road	Country Flame	Georgetown Woodstove	Lancaster Fab	Orley Manufacturing	Timbereeze
Appalachian	Craft Stoves	Hardy MFG Company	Leaders	Orrville Products	Travis Industries
Arrow	Derco	Harman/Vansco	Lennox	Panda Stove	US Stove
Ashley	DK Metals	Hearth Heat	Lilly Stoves	Reges Metal	Vansco/Harman
Aspen	Dominion Sierra	Hearthstone	Long Manufacturing	RiteWay	Vermont Castings
Atlanta Stove	Doorwood	Heatilator Inc.	Marks Custom	RSF Energy	Vestal Manufacturing
Blaze King	Dove/Buckner	Heating Energy	Martin Industries	Rupp	Webco Industries
Buck Corp.	Dovre	High Sierra	Miracle Heat	Russo Products LTD.	Wet Industries
Buckner/Dove	Earth Stove	High Valley	National Steel Crafters	Salvo	Woodchief
C&D Distributors	Efel N.A./Foundries	Hi Teck	New Buck Corp.	Scandia	Woodmaster
Carolina Stove	Elmira Stoves	Horstman Industries	Nu-Tec	Sears	Woodstock Soapstone

How Wood Stoves Are Used

- How many of you heat your home with a wood stove?
- When you're at work 8 hours a day and sleeping 8 hours each night, is your stove set to a high burn rate?
- How often do you use higher burn rates?

Catalytic Hearth Coalition

How Stoves Are Used?

COMPARE	PM (g/hr) (Particulate Matter)			
	Stoves spend 80% of their life in this range			
	Low	Medium	Medium High	High
Burn Rate (kg/hr)	<0.8	0.8 to 1.25	1.25 to 1.9	MAX (3 to 5)
Heat Output (BTU/hr)	<10,000	~12,000	~15,000	~40,000+
AVG Washington State Certified NON-CAT Stove	3.45	3.85	3.05	2.70
AVG Washington State Certified CAT Stove	0.29	0.83	1.24	4.67

Test Method Weighting

- The test and the weightings should all be reflective of how the stove is used in the real world.

CHC Suggests Burn Rate Values of

Low 60% Medium 30% High 10%

CHC Suggests Cord Wood Testing

Final Notes

- Long burn times are the hallmark of our industry, the proof is in the marketing. Manufacturers do not brag or talk of high burn times, but rather low burn times. Because folks, low, long burn times are what consumers want.
- Typically, non catalytic wood stoves burn cleanest when operated at the highest possible burn rates and conversely, burn less clean on the lower burn rates.
- Catalytic wood stoves typically have the inverse relationship. That is, the lower they burn, catalytic wood stoves burn cleaner. The higher burn rates are less clean but as mentioned earlier, in the real world folks just don't burn their wood stoves on high all that often.